15

N.Z. Courtenay

DEALERS' SERVICE DATA

No. 9

MODEL 15.
BROADCAST ONLY.

FIRST EDITION, OCTOBER, 1935.
CIRCUIT D189.

2nd edit Oct 1935

TURNBULL & JONES LTD.

Head Office : Wellington.

AUCKLAND, HAMILTON, PALMERSTON NORTH, CHRISTCHURCH, DUNEDIN.

STELLA
Model 15 5-valve 1935

14

ELECTRICAL SPECIFICATIONS.

Mains operated for	200-250 volts A.C. 50 cycles
Power consumption	60 watts
Undistorted output	3 watts
Valves used	1-80, 1-42, 1-6B7, 1-6A7, 1-6D6
Intermediate frequency	465 K.C.
Broadcast Band frequency	550-1500 K.C.

GENERAL INSTRUCTIONS FOR LINING UP FIVE VALVE MODELS.

This method of line up presumes the possession of a standard signal generator covering all frequencies.

First, connect output from signal generator to grid of 6A7 mixer, and take care that ¼ M.F. condenser is between 6A7 grid and signal generator output, as otherwise bias would be short-circuited in this valve.

Set standard signal generator to 465 K.C. and align up I.F. transformers. These are aligned from top of chassis in the cans at back of chassis. Read microvolts absolute input as required to give standard 50 milliwatts output as shown on accompanying chart. Next, to line up the broadcast bands, set must be removed from cabinet. The broadcast trimmers are mounted underneath chassis.

TO LINE UP BROADCAST BAND proceed as follows:—

(1) See that pointer is adjusted in a horizontal position when condensers are full in, that is, full capacity.

(2) Tune receiver dial to 1400 K.C. position. Adjust receiver oscillator and R.F. trimmers until 1400 K.C. signal from standard sig, gen. gives maximum output.

(3) Set receiver dial to 600 k.c. position. Adjust broadcast padder until 600 K.C. signal from generator gives maximum output. Check sensitivity with chart.

Important: Make no further adjustment on oscillator trimmer or padder condensers.

(4) Re-set receiver dial to 1400 K.C. position. Re-align R.F. trimmers only for maximum output of 1400 K.C. signal, and check sensitivity with chart. No further adjustment should be necessary for the broadcast band.

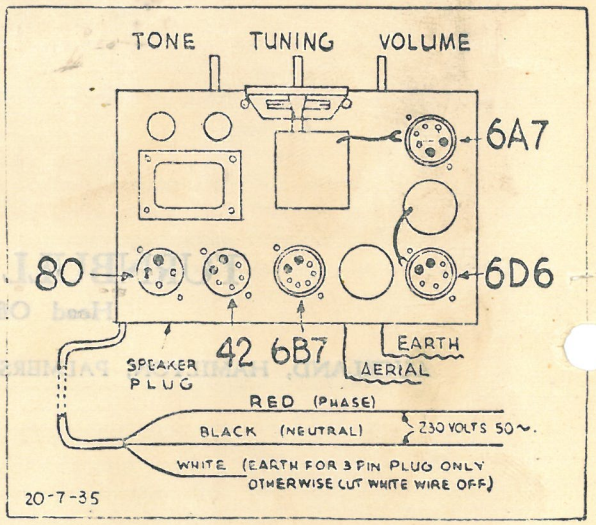

Model 15
IF trimmer are under chassis

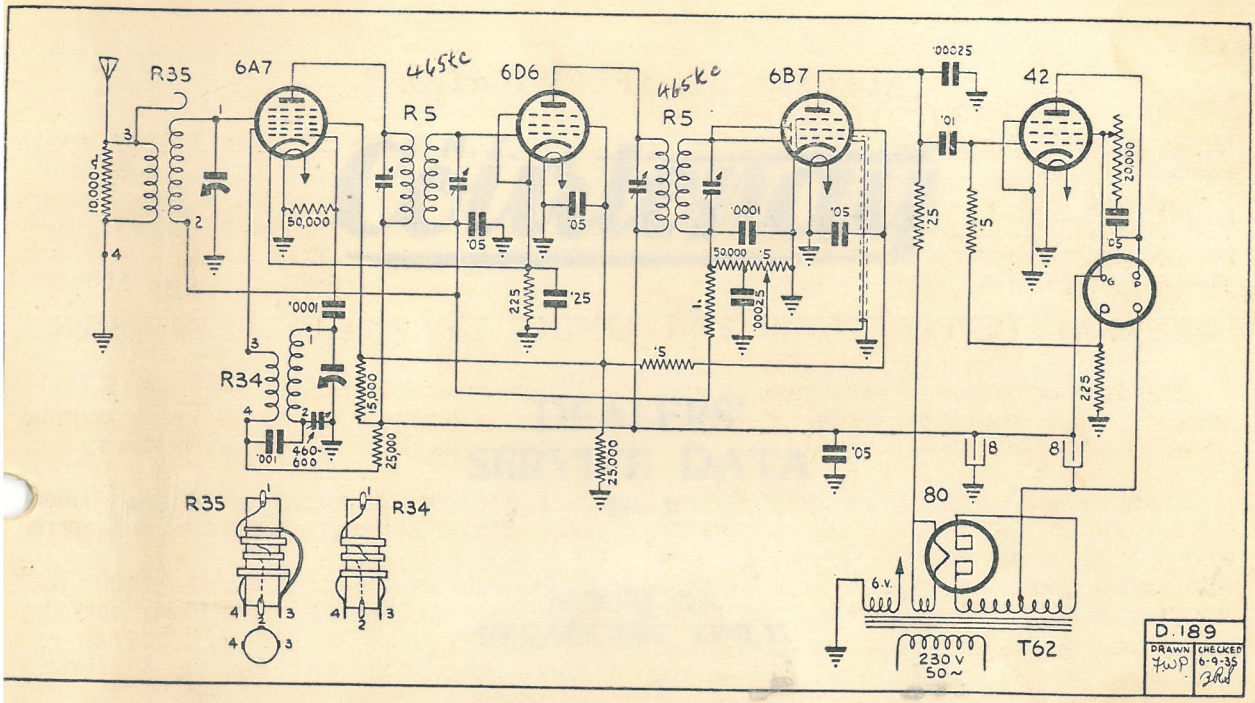

VALVE VOLTAGES.

Valve.	Function.	Heater.	Plate.	Screen.	Grid.	Cathode	Plate MA
80	Rectifier	5.2	(See note ‡)				
42	Output	6.3	205	225	−14*	0	30 MA
6B7	Det. & Aud.	6.3	70†	20†	0	0	
6D6	I.F. Amp.	6.3	225	85	A.V.C.	3	
6A7	Mixer-Osc.	6.3	225	85	A.V.C.	3	

* Read on 100 volt scale, 1000 ohm/volt voltmeter.

† Read on 500 volt scale, 1000 ohm/volt voltmeter.

‡ High tension secondary measured from each 80 plate to can of insulated Elec. Cond., 80 removed: 325 volts A.C.

Total D.C. measured from 80 fil. to can of insulated Elec. Cond.: 320 V.D.C.

Filtered D.C. 80 fil. to earth 225 Volts D.C.

STAGE TO STAGE SENSITIVITY TO GIVE 18.7 VOLT OUTPUT.

465 K.C.	10,000	Micro-volts absolute to grid of I.F. Amp.
465 K.C.	40	Micro-volts absolute to grid of Mixer.
1400 K.C.	12	Micro-volt absolute to set's Antenna.*
1000 K.C.	12	Micro-volt absolute to set's Antenna.*
600 K.C.	12	Micro-volt absolute to set's Antenna.*

* Signal applied to set's Antenna through Standard 4 meter Dummy Antenna.

Printed by R.N.Z.

Early model has separate field coil in neg lead
but
Back on RF, IF & O/P
6B7 is diode beamon
Air coil cards & IFTS

Columbus Model 15

By Ian King

1937 was the introductory year of the Columbus brand name for R.C.N.Z., and the model 15 bearing the brand originally was marketed in 1935 under the Courtenay name.

Back biasing was replaced by cathode biasing, and iron cored aerial, oscillator and I.F. coils were introduced for the Columbus model.

The cabinetry is a simple but very attractive tombstone design of unusually small dimensions: 15" high, 7.75 " by 13" width.

In order to accommodate an 8" E.M. speaker, an inclined baffle board extending from front to rear of the cabinet was installed. This baffle created a box within a box effect which gives a pleasant, rounded sound worthy of that which one would expect from a much larger cabinet.

In 60 years of pursuing a strong interest in valve radios, I have never come across this model Columbus before, which would be a reasonable indicator of its rarity.

All in all, a most enjoyable restoration, which was heightened for me by gold lettering along the bottom of the glass dial scale which reads "MADE IN U.S.A." (Referring of course to the dial, not the chassis.

An interesting discovery indeed, and one which I would appreciate other NZVRS members' comments upon.